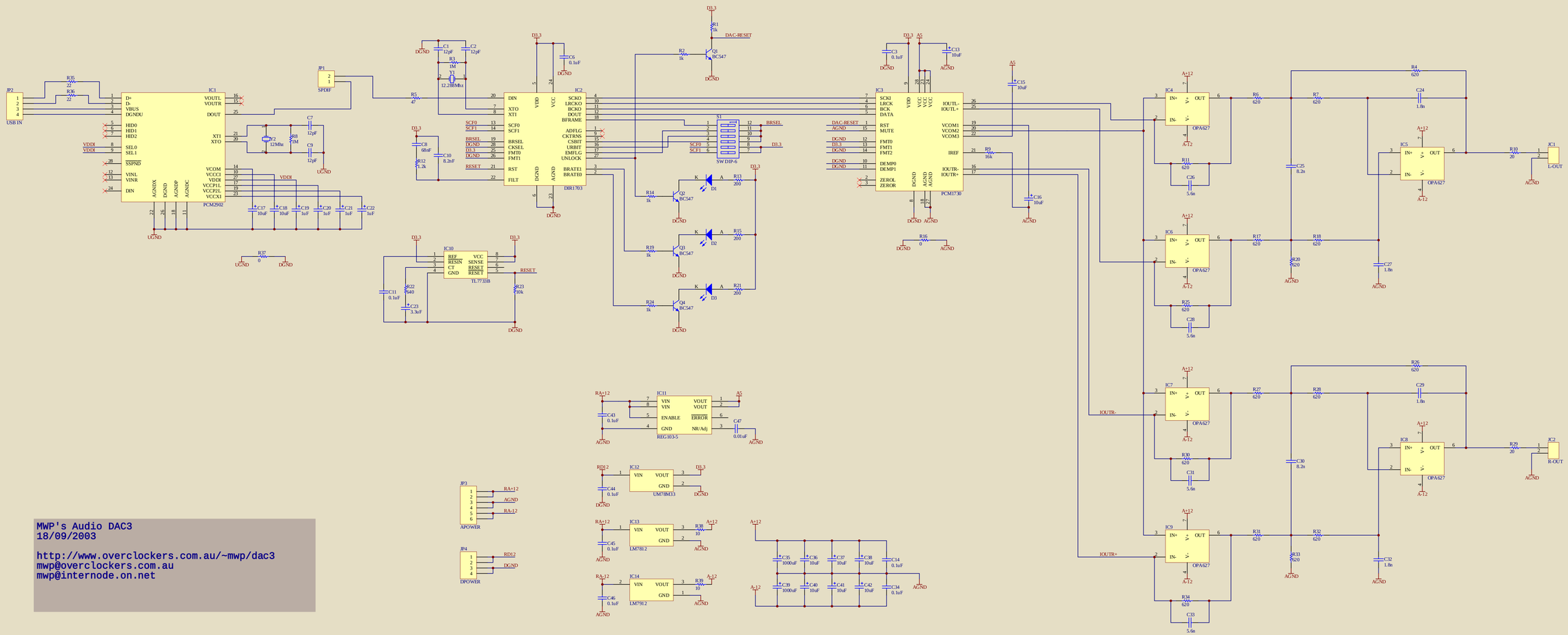

MWP's Audio DAC3
18/09/2003

http://www.overclockers.com.au/~mwp/dac3
mwp@overclockers.com.au
mwp@internode.on.net